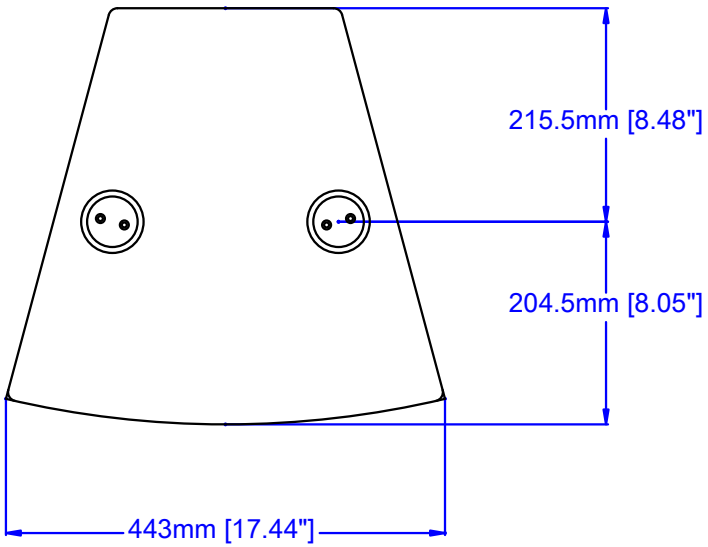
215.5mm [8.48"]
204.5mm [8.05"]
443mm [17.44"]

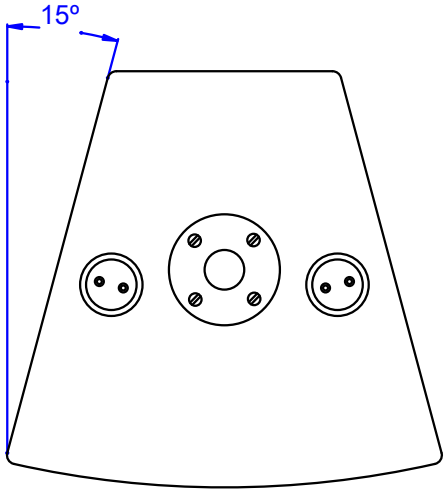
15º

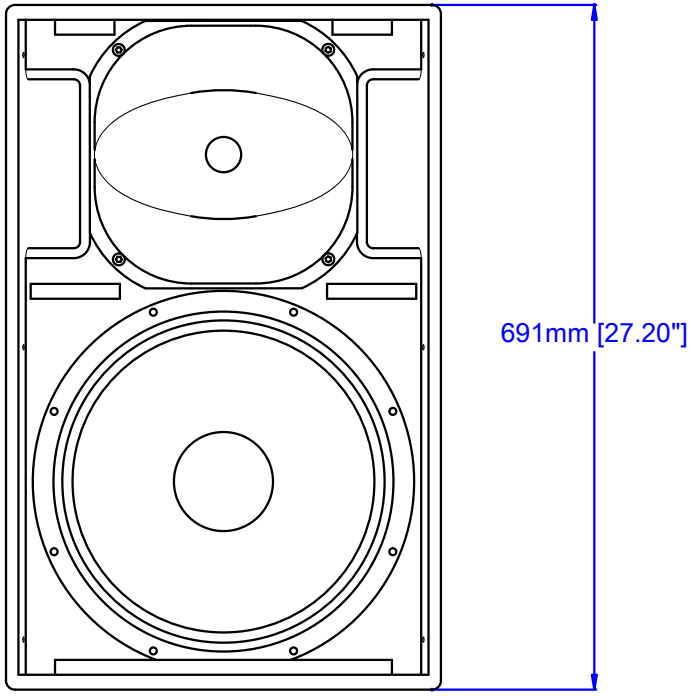
691mm [27.20"]

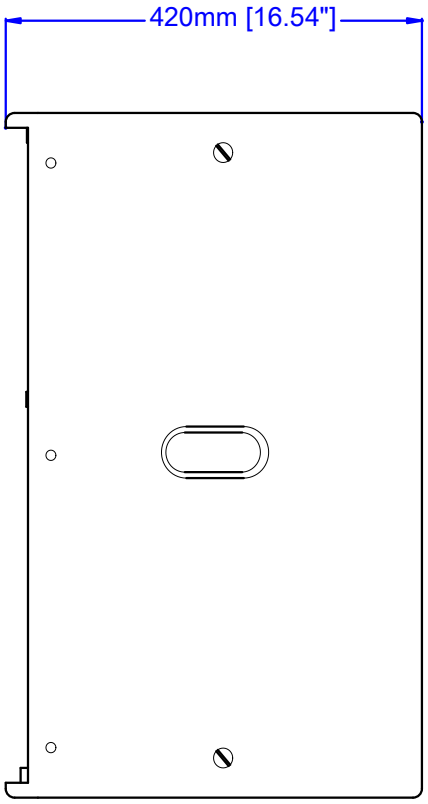
420mm [16.54"]

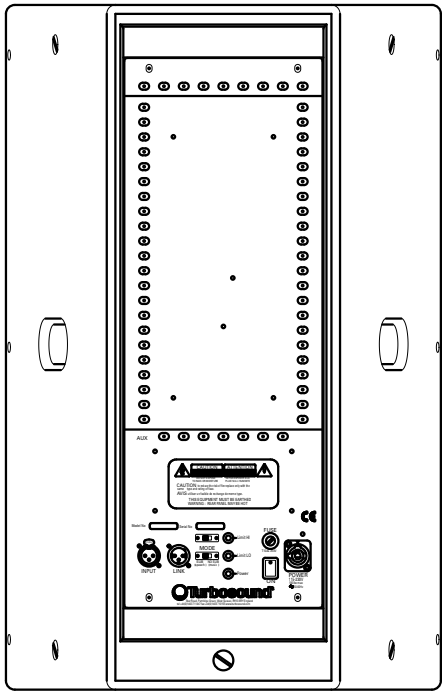
AUX
Turbosound