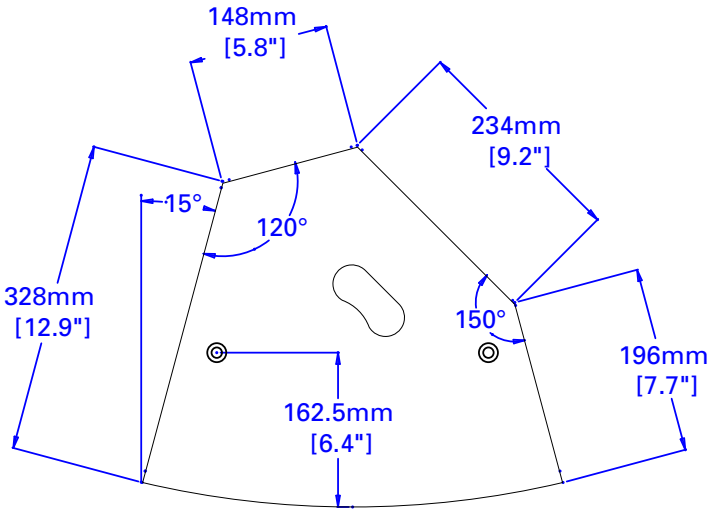

TOP

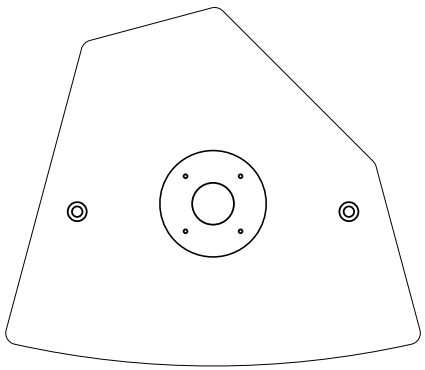

BOTTOM

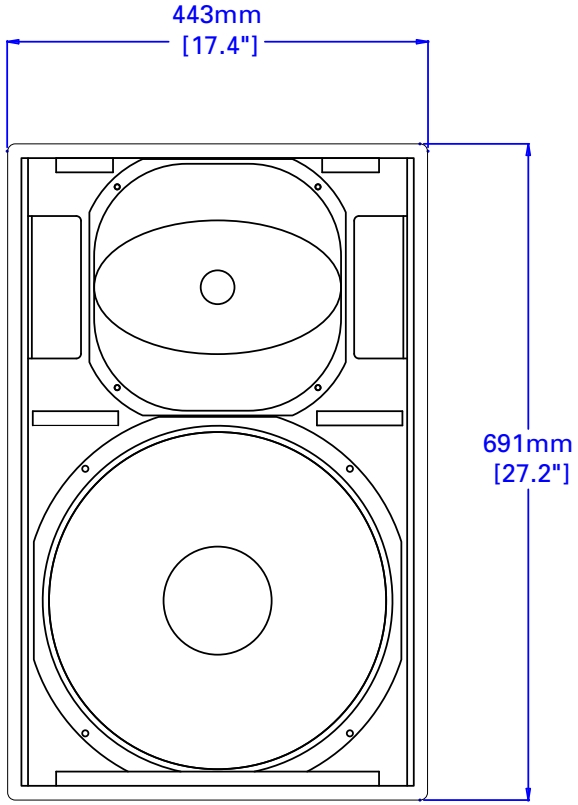

FRONT

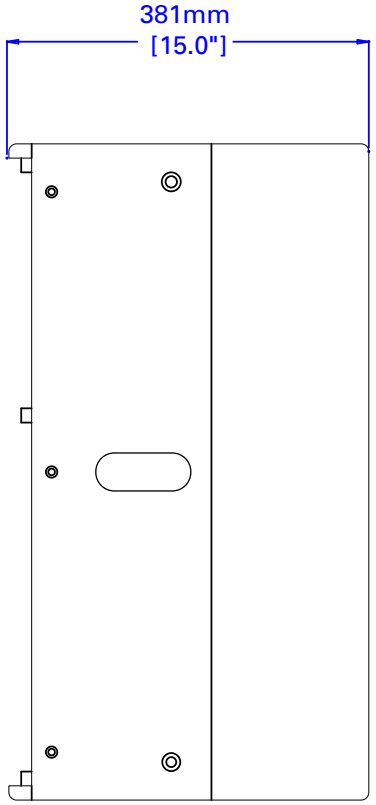

SIDE

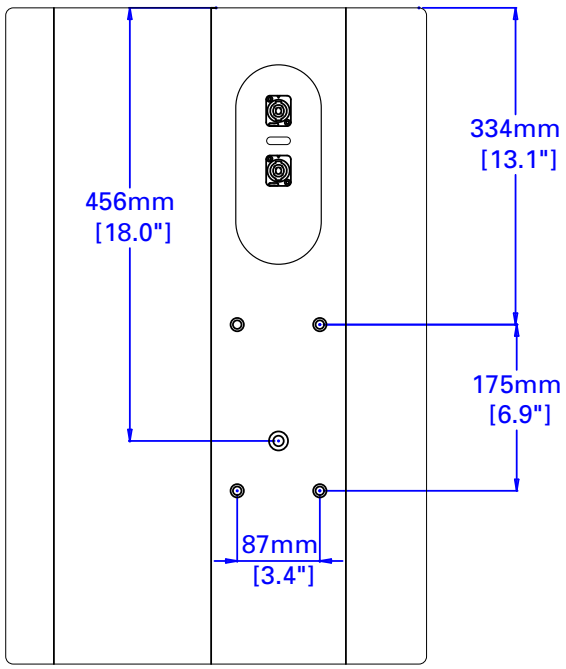

BACK